STAHLWILLE®

TORX® screwdriver sockets 1/2", with hole

54TXB

Product no.	**03110050**
GTIN	**4018754102044**
Model	**54TXB T50 TORX®**

Label. 1/2 " Screwdriver socket L.55mm

Properties.

- for recessed TORX® screws
- with hole in the drive tip (TORX® Tamper Resistant)
- 1/2" internal square drive
- Chrome Alloy Steel, chrome-plated

Technical drawing.

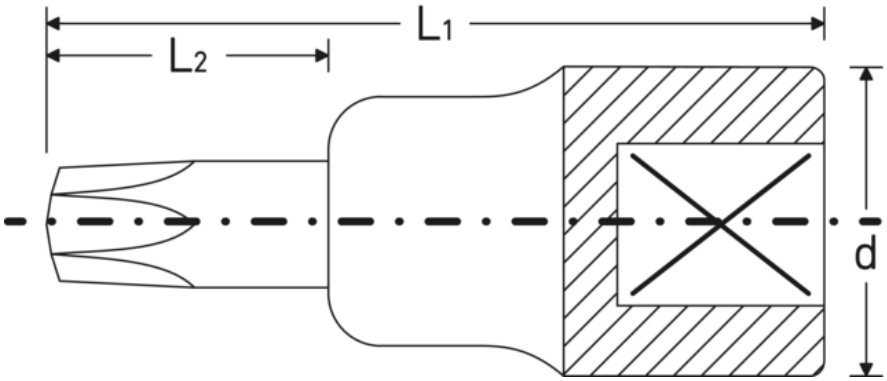

Technical attributes.

for screws	M10
Size drive profile	T50
TORX® drive profile (mm)	8,94 mm
Square drive inner (inch)	1/2 "
L1	55 mm

Logistics data.

Product no.	03110050
GTIN	4018754102044
Weight (g)	86 g
Volume (packaged, dm3)	0.9 dm3
Packing standard	20

L2	17 mm
Drive profile	TORX®
d	22,7 mm
Alloy	Chrome Alloy Steel, chrom plated

WEEE/ElektroG	nicht ear-pflichtig
Customs tariff no.	82042000
Country of origin AWR	GERMANY
Region of origin	Nordrhein-Westfalen
Depth mm (IFS)	55
Width mm (IFS)	23
Height mm (IFS)	23
Weight (gross, kg)	1,700
Weight PAP (kg)	0,000
Weight PVC (kg)	0,006
Length (packaged, mm)	100
Width (packaged, mm)	100
Height (packaging, mm)	90

GTIN.

4 018754 102044

STAHLWILLE Eduard Wille GmbH
Lindenallee 27 · 42349 Wuppertal · Germany · Phone: +49 202 4791-0
info@stahlwille.de · www.stahlwille.com
© STAHLWILLE Eduard Wille GmbH, Wuppertal